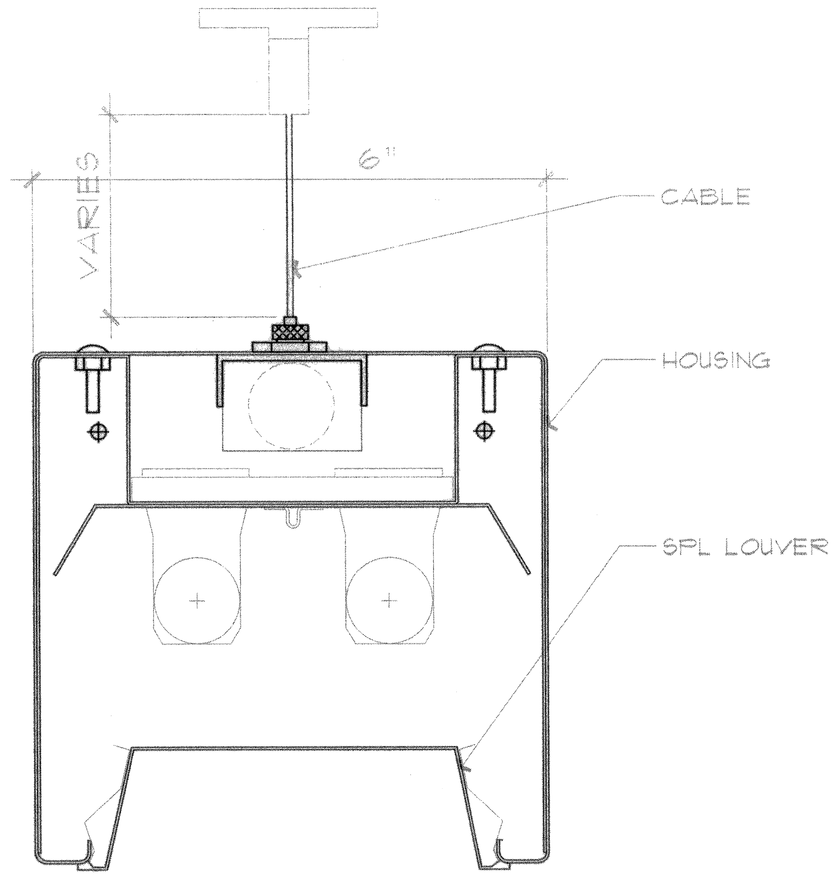

SUSPENDED LIGHT FIXTURE | SCALE: NTS | 4

LIGHTING POLES LESS THAN 35 FEET ABOVE THE GRADE ARE NOT CONSIDERED TO BE PART OF SCHOOL BUILDING BUT MAY BE INCLUDED IN THE PLANS AND SPECIFICATIONS, PER 2007 CBC 4-314 DEFINITIONS: SCHOOL BUILDINGS (PAGE 35); THEREFORE LIGHTING POLES AND FOOTINGS LESS THAN 35 FEET ARE NOT PART OF DSA REVIEW.

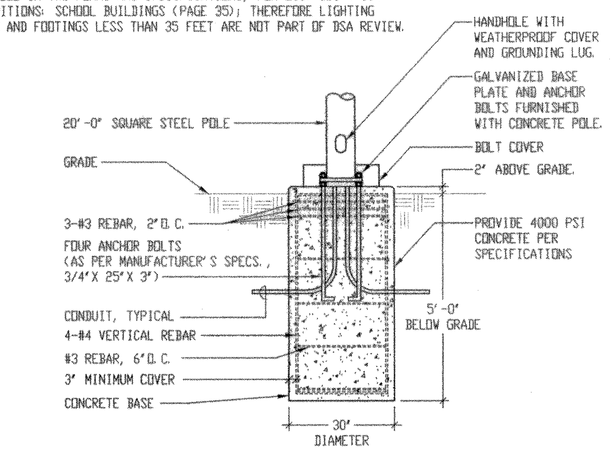

POLE BASE DETAIL - SEMI-FLUSH | SCALE: NTS | 1

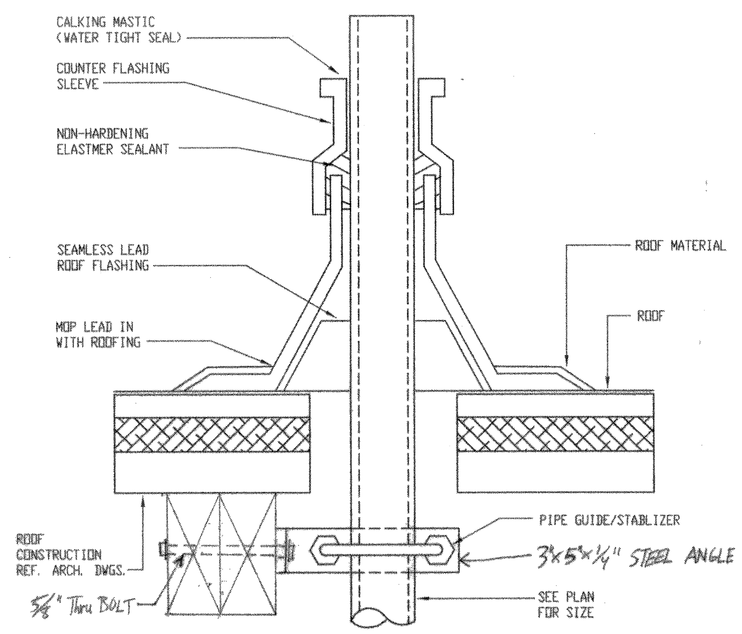

TYPICAL CONDUIT PENETRATION THROUGH ROOF | SCALE: NTS | 5

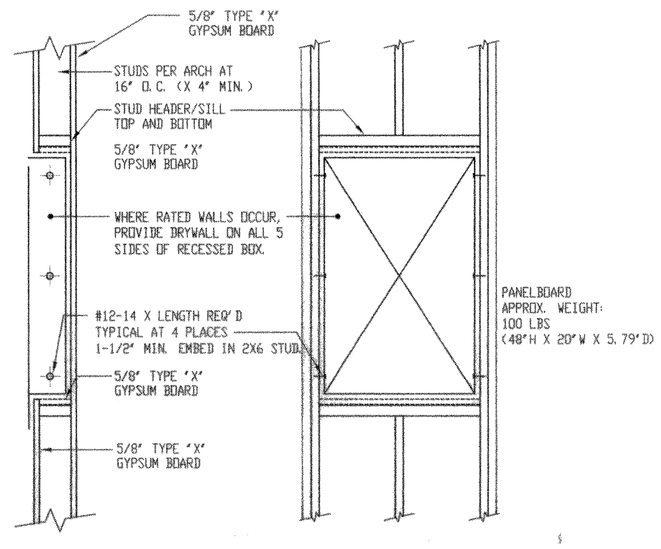

FLUSH MOUNTING PANELBOARD/TERMINAL CABINET ANCHORAGE | SCALE: NTS | 2

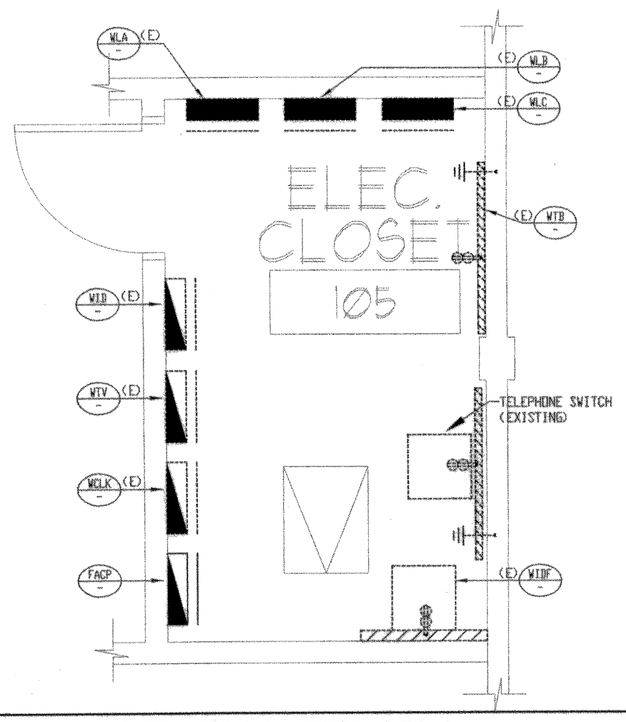

EXISTING ELECTRICAL ROOM DETAIL | SCALE: 1/4"=1'-0" | 6

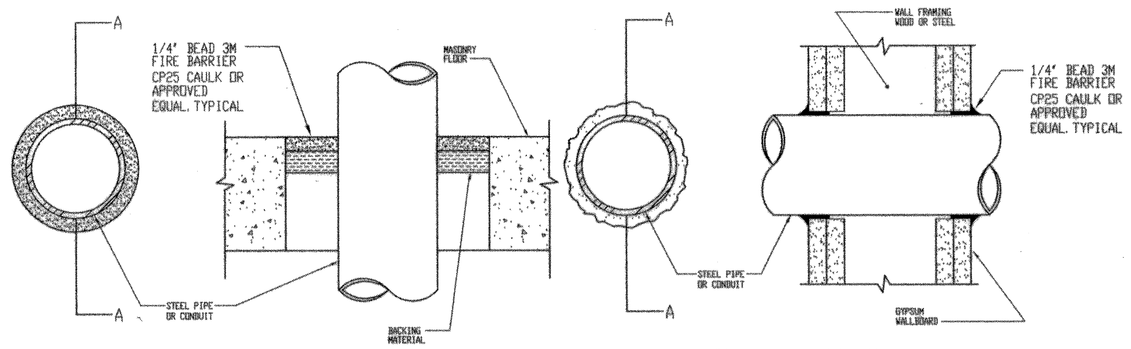

MASONRY FLOOR PENETRATION

FRAMED WALL PENETRATION

NOTE:

PENETRATION IN FIRE-RESISTIVE WALLS, PARTITIONS AND FLOORS WHERE PROTECTED OPENINGS ARE REQUIRED SHALL BE FIRE STOPPED USING APPROVED MATERIALS, SECURELY INSTALLED AND CAPABLE OF MAINTAINING THEIR INTEGRITY AND PREVENTING THE MOVEMENT OF HOT FLAMES OR GASSES THROUGH THE VOID SPACES BETWEEN PENETRATING MATERIALS AND WALLS, PARTITIONS AND FLOORS WHEN TESTED IN ACCORDANCE WITH ASTM STANDARD E-814 OR UL STANDARD 1479 (UBC SECTION 4304(e) & 4305(b).

CONDUIT PENETRATION DETAIL | SCALE: NTS | 6

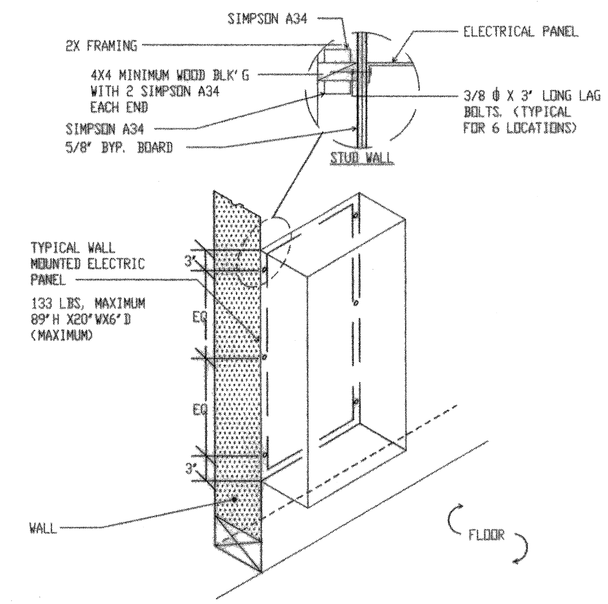

SURFACE MOUNTING PANELBOARD/TERMINAL CABINET ANCHORAGE | SCALE: NTS | 3

San Gabriel Unified School District

408 Junipero Serra
San Gabriel, CA 91776

IBI GROUP

ARCHITECTS ENGINEERS PLANNERS

ARCHITECT:
IBI Group
18401 Von Karman Avenue, Suite 110
Irvine, California 92612
Phone 949-833-5588
Fax 949-833-5511

STRUCTURAL ENGINEER:
Martin, Chow & Nakabara, Inc.
3185-C Airway Avenue
Costa Mesa, CA 92626
Phone 714-979-3003
Fax 714-979-3259

MECHANICAL ENGINEER:
Fundament & Associates
26 Executive Park #100
Irvine, CA 92614
Phone 949-251-1131
Fax 949-251-9434

ELECTRICAL ENGINEER:
FBA
3420 Irvine Avenue, Suite 200
Newport Beach, CA 92660-3189
Phone 949-852-9995
Fax 949-852-1657

CIVIL ENGINEER:
Snipes-Dye Associates
8348 Center Drive, Suite G
La Mesa, CA 91942-2910
Phone 619-697-9234
Fax 619-460-2033

LANDSCAPE ENGINEER:
IBI Group
10 Exchange Place- Suite 112
Salt Lake City UT 84111 USA
Phone 801-532-4233
Fax 801-532-4231

FBA Engineering
Consulting Electrical Engineers
3420 Irvine Avenue Suite 200
Newport Beach, California 92660-3189
TEL: 949 852 9995 FAX: 949 852 1657
EMAIL: fba@fbaengineering.net
FBA # 89817.70

REGISTERED PROFESSIONAL ENGINEER
STEPHEN R. DAITCHMAN
No. E 10372
Exp. 09-30-10
ELECTRICAL
STATE OF CALIFORNIA

IDENTIFICATION STAMP
DIV. OF THE STATE ARCHITECT
OFFICE OF REGULATION SERVICES
03-112620
AC FLS SPM SS
DATE

LICENSED ARCHITECT
KEVIN S. FLEMING
No. C20648
08-31-11
RENEWAL DATE
STATE OF CALIFORNIA

This drawing, as an instrument of service, is the property of the Architect and may not be reproduced without their permission and unless the reproduction carries their name. All design and other information show on this drawing are for the use on the specified project only and shall not be used otherwise without written permission of the Architect.

Written dimensions shall have precedence over scaled dimensions. Contractors shall verify and be responsible for all dimensions and conditions on the job and the Architect shall be informed of any variations from the dimensions and conditions show on the drawing. Shop drawings shall be submitted to the Architect for approval before proceeding with fabrication.

Del Mar High School

312 Del Mar Ave
San Gabriel, CA 91776

DETAILS

Project Number	20318
Date	FEBRUARY, 2010
Drawn By	JBM
Checked By	RR

E0.6

Scale