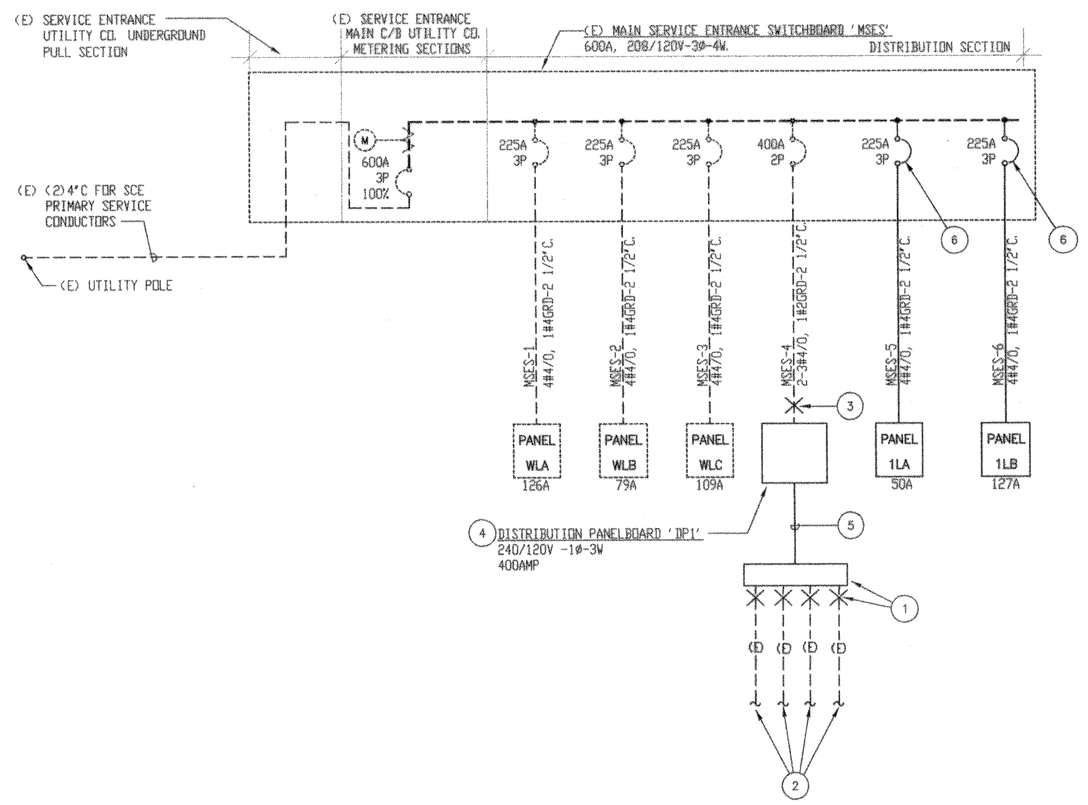

SINGLE LINE DIAGRAM

SINGLE LINE DIAGRAM

1. INTERCEPT THE EXISTING CONDUIT RUNS TO THE EXISTING SWITCHBOARD. PROVIDE WIREWAY MOUNTED BELOW THE PANELBOARD. TERMINATE THE EXISTING CONDUITS FED BY THE EXISTING SWITCHBOARD AT THE WIREWAY.
2. EXISTING CONDUITS FEEDING THE REST OF THE CAMPUS.
3. INTERCEPT THE CONDUIT FEEDING THE EXISTING SWITCHBOARD AND EXTEND TO NEW DISTRIBUTION PANELBOARD.
4. PROVIDE NEW DISTRIBUTION PANELBOARD AT THE SAME LOCATION AS THE EXISTING SWITCHBOARD. THE EXISTING SWITCHBOARD IS TO BE DISCONNECTED AND REMOVED. PROVIDE NEW BREAKERS WITH AMPERE RATING TO MATCH THE EXISTING BREAKERS IN THE EXISTING SWITCHBOARD.
5. PROVIDE (4) 2"C. FROM THE WIREWAY TO THE NEW DISTRIBUTION PANELBOARD. EXTEND WIRES THROUGH THESE CONDUITS AND RECONNECT TO FULLY SERVE THE EXISTING EQUIPMENT.
6. PROVIDE NEW CIRCUIT BREAKER (TYPE AND AIC RATING TO MATCH EXISTING) IN AVAILABLE SPACE OF THE EXISTING SWITCHBOARD. PROVIDE DEADFRONT COVER, PERMANENTLY ATTACHED NAMEPLATE AND MOUNTING HARDWARE FOR A COMPLETE INSTALLATION.

DEL MAR HIGH SCHOOL — PROJECT NO. 888.170

VOLTS 120/208 — PHASE 3PH, 4W — MTG SURFACE

PANELBOARD 1LA — LOCATION ELECTRIC ROOM — MAIN 225A — BUS 225A

CKT	LOAD (VA) A	LOAD (VA) B	LOAD (VA) C	TYPE	BKR	OUTLET QUAN	DESCRIPTION
1	540	----	----	R	20/1	3	CONV. RECEPT.
3	----	540	----	R	20/1	3	CONV. RECEPT.
5	----	----	540	R	20/1	3	RESTROOM RECEPT.
7	540	----	----	R	20/1	3	RESTROOM RECEPT.
9	----	540	----	R	20/1	3	FLEX CLASSROOM RECEPT.
11	----	----	540	R	20/1	3	FLEX CLASSROOM RECEPT.
13	540	----	----	R	20/1	3	FLEX CLASSROOM RECEPT.
15	----	540	----	R	20/1	3	FITNESS RECEPT.
17	----	----	540	R	20/1	3	FITNESS RECEPT.
19	540	----	----	R	20/1	3	FITNESS RECEPT.
21	----	540	----	R	20/1	3	FITNESS RECEPT.
23	----	----	500	R	20/1	1	IDF
25	1500	----	----	G	20/1	6	MOTORIZED SKYLIGHT
27	----	540	----	G	20/1	3	FLEX CLASSROOM RECEPT.
29	----	----	540	G	20/1	3	FLEX CLASSROOM RECEPT.
31		----	----		20/1		SPARE
33	----	----	----		20/1		SPARE
35	----	----			20/1		SPARE
37		----	----				PROVISION
39	----	----					PROVISION
41	----	----					PROVISION

CKT	LOAD (VA) A	LOAD (VA) B	LOAD (VA) C	TYPE	BKR	OUTLET QUAN	DESCRIPTION
2	180	----	----	R	20/1	1	CONV.
4	----	500	----	G	20/1	1	STC
6	----	----	500	G	20/1	1	EXPT ✱
8	540	----	----	R	20/1	3	FLEX CLASSROOM RECEPT.
10	----	540	----	R	20/1	3	FLEX CLASSROOM RECEPT.
12	----	----	540	R	20/1	3	FLEX CLASSROOM RECEPT.
14	2304	----	----	L	20/1	32	FITNESS LIGHTING
16	----	275	----	L	20/1	1	FITNESS LIGHTING
18	----	----	322	L	20/1	7	RESTROOM/STORAGE LIGHTING
20	1670	----	----	L	20/1	21	FLEX CLASSROOM LIGHTING
22	----	1775	----	L	20/1	26	FLEX CLASSROOM LIGHTING
24	----	----	315	L	20/1	7	EXTERIOR LIGHTING
26	225	----	----	L	20/1	5	EXTERIOR LIGHTING
28	----	30	----	L	20/1	2	EXIT SIGNS
30	----	----	48	L	20/1	2	EGRESS LIGHTING
32		----	----		20/1		SPARE
34	----	----			20/1		SPARE
36	----	----			20/1		SPARE
38		----	----				PROVISION
40	----	----					PROVISION
42	----	----					PROVISION

CONNECTED	VA	AMPS
PHASE A =	8579	71
PHASE B =	5820	49
PHASE C =	4385	37
TOTAL =	16784	52

L.C.L. @ 125% =	6705	
RECEPT. ( ) 10 VA @ 500 =	6240	
KITCHEN @ 65% =	0	
OTHER LOAD @ 100% =	3580	
TOTAL VA =	20525	
TOTAL AMPS =		57

LOAD TYPES
G - GENERAL (100%) — M - MOTOR (100%)
L - L.C.L. (125%) — M1 - MOTOR (125%)
R - RECEPTACLE (50%) — X - X-RAY (100%)
(10 VA @ 100%) — X1 - X-RAY (50%)
K - KITCHEN (65%)

✱ PROVIDE LOCK ON DEVICE

DEL MAR HIGH SCHOOL — PROJECT NO. 888.170

VOLTS 120/208 — PHASE 3PH, 4W — MTG SURFACE

PANELBOARD 1LB — LOCATION ELECTRIC ROOM — MAIN 225A — BUS 225A

CKT	LOAD (VA) A	LOAD (VA) B	LOAD (VA) C	TYPE	BKR	OUTLET QUAN	DESCRIPTION
1	3546	----	----	M1	50/2	1	HP-1
3	----	3546	----	M1	----	-	----
5	----	----	3546	M1	50/2	1	HP-2
7	3546	----	----	M1	----	-	----
9	----	3546	----	M1	50/2	1	HP-3
11	----	----	3546	M1	----	-	----
13	3546	----	----	M1	50/2	1	HP-4
15	----	3546	----	M1	----	-	----
17	----	----	420	L	20/1	6	SITE LIGHTING
19	350	----	----	L	20/1	5	SITE LIGHTING
21	----	700	----	L	20/1	10	SITE LIGHTING
23	----	----	250	L	20/1	5	SITE LIGHTING
25		----	----		20/1		SPARE
27	----	----			20/1		SPARE
29	----	----			20/1		SPARE
31		----	----				PROVISION
33	----	----					PROVISION
35	----	----					PROVISION
37		----	----				PROVISION
39	----	----					PROVISION
41	----	----					PROVISION

CKT	LOAD (VA) A	LOAD (VA) B	LOAD (VA) C	TYPE	BKR	OUTLET QUAN	DESCRIPTION
2	667	----	----		20/1	1	R1-EF-1
4	----	794	----	M1	20/2	1	FC-1
6	----	----	794	M1	----	-	----
8	794	----	----	M1	20/2	1	FC-2
10	----	794	----	M1	----	-	----
12	----	----	794	M1	20/2	1	FC-3
14	794	----	----	M1	----	-	----
16	----	794	----	M1	20/2	1	FC-4
18	----	----	794	M1	----	-	----
20	500	----	----	R	20/1	2	WIRELESS ACCESS POINTS
22	----	----			20/1		SPARE
24	----	----			20/1		SPARE
26		----	----		20/1		SPARE
28	----		----		20/1		SPARE
30	----	----			20/1		SPARE
32		----	----		20/1		SPARE
34	----		----		20/1		SPARE
36	----	----			20/1		SPARE
38		----	----				PROVISION
40	----	----					PROVISION
42	----	----					PROVISION

CONNECTED	VA	AMPS
PHASE A =	13244	115
PHASE B =	13921	114
PHASE C =	10245	85
TOTAL =	37710	105

L.C.L. @ 125% =	49679	
RECEPT. ( ) 10 VA @ 500 =	500	
KITCHEN @ 65% =	0	
OTHER LOAD @ 100% =	667	
TOTAL VA =	46846	
TOTAL AMPS =		130

LOAD TYPES
G - GENERAL (100%) — M - MOTOR (100%)
L - L.C.L. (125%) — M1 - MOTOR (125%)
R - RECEPTACLE (50%) — X - X-RAY (100%)
(10 VA @ 100%) — X1 - X-RAY (50%)
K - KITCHEN (65%)

R1- PROVIDE

San Gabriel Unified School District

408 Junipero Serra
San Gabriel, CA 91776

IBI GROUP

ARCHITECTS ENGINEERS PLANNERS

ARCHITECT:
IBI Group
18401 Von Karman Avenue, Suite 110
Irvine, California 92612
Phone 949-833-5588
Fax 949-833-5511

STRUCTURAL ENGINEER:
Martin, Chow & Nakabara, Inc.
3185-C Airway Avenue
Costa Mesa, CA 92626
Phone 714-979-3003
Fax 714-979-3259

MECHANICAL ENGINEER:
Fundament & Associates
26 Executive Park #100
Irvine, CA 92614
Phone 949-251-1131
Fax 949-251-9434

ELECTRICAL ENGINEER:
FBA
3420 Irvine Avenue, Suite 200
Newport Beach, CA 92660-3189
Phone 949-852-9995
Fax 949-852-1657

CIVIL ENGINEER:
Snipes-Dye Associates
8348 Center Drive, Suite G
La Mesa, CA 91942-2910
Phone 619-697-9234
Fax 619-460-2033

LANDSCAPE ENGINEER:
IBI Group
10 Exchange Place- Suite 112
Salt Lake City UT 84111 USA
Phone 801-532-4233
Fax 801-532-4231

FBA Engineering
Consulting Electrical Engineers
3420 Irvine Avenue Suite 200
Newport Beach, California 92660-3189
TEL/ 949 852 9995 FAX/ 949 852 1657
EMAIL: fba@fbaengineering.net
FBA: # 898170

REGISTERED PROFESSIONAL ENGINEER — STEPHEN R. DATTNER — No. E 10372 Exp. 09-30-10 — ELECTRICAL — STATE OF CALIFORNIA

IDENTIFICATION STAMP
DIV. OF THE STATE ARCHITECT
OFFICE OF REGULATION SERVICES
03-112620
AC ..... FLS ..... SS .....
DATE .....

LICENSED ARCHITECT — KEVIN S. FLEMING — No. C26668 — 08-15-11 RENEWAL DATE — STATE OF CALIFORNIA

This drawing, as an instrument of service, is the property of the Architect and may not be reproduced without their permission and unless the reproduction carries their name. All design and other information show on this drawing are for the use on this specified project only and shall not be used otherwise without written permission of the Architect.

Written dimensions shall have precedence over scaled dimensions. Contractors shall verify and be responsible for all dimensions and conditions on the job and the Architect shall be informed of any variations from the dimensions and conditions show on the drawing. Shop drawings shall be submitted to the Architect for approval before proceeding with fabrication.

Del Mar High School

312 Del Mar Ave
San Gabriel, CA 91776

SINGLE LINE DIAGRAM AND PANEL SCHEDULES

Project Number	20318
Date	FEBRUARY, 2010
Drawn By	JBM
Checked By	RR

E0.2

Scale